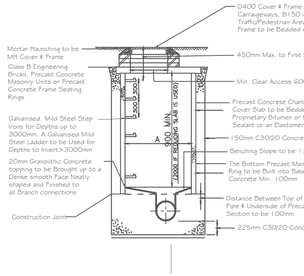

Notes:

1. MANHOLES WITH OUTGOING PIPES GREATER THAN 600MM DIA. SHOULD BE FITTED WITH GUARD BARS, SAFETY CHAINS OR OTHER SAFETY DEVICES.
2. ALL PRECAST CONCRETE RINGS TO BS539-1 PART 200.
3. FOR DEPTH TO INVERTS>2.700M - AN ACCESS SHAFT OF MIN. 900, DIA. & REDUCING SLAB MAY BE USED

DIAMETER OF PIPE IN MANHOLE (LARGEST) mm)	MINIMUM INTERNAL DIAMETER OF MANHOLE (mm) 'A'
LESS THAN 375	1200 (1200 WHERE DEPTH TO SOFFIT IS 1.0M-1.50M)
375 – 450	1350
450 – 750	1500
750 – 900	1800

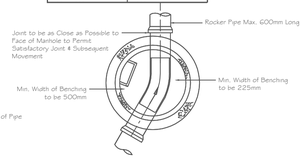

MIN. INTERNAL DIMENSION OF MANHOLES

Depth to Invert (m)	Pipe size Dia. (mm)	Internal Dia. (m)
Less than 1m	100	1000 x 1000
	150	1000 x 1000
	225	1000 x 1000
	300	1000 x 1000
	375	1000 x 1000
	450	1000 x 1000
	525	1000 x 1000
	600	1000 x 1000
1m to 2m	100	1200 x 1200
	150	1200 x 1200
	225	1200 x 1200
	300	1200 x 1200

PRIVATE DRAINAGE
[ALTERNATIVE IN-SITU REINFORCED CONCRETE MANHOLE DETAILS]
STRUCTURAL TO BE CERTIFICATED

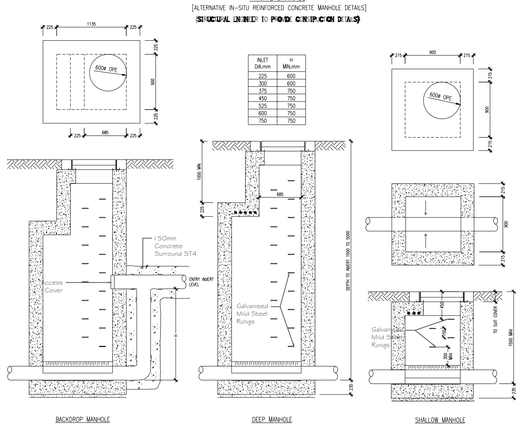

05 / 140 TYPICAL MANHOLE DETAILS
SCALE NTS

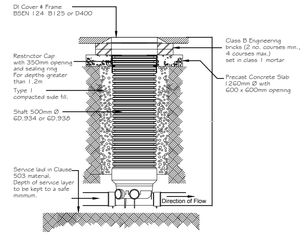

08 / 140 FOUL SEWER INSPECTION CHAMBER (F.I.C)
SCALE NTS

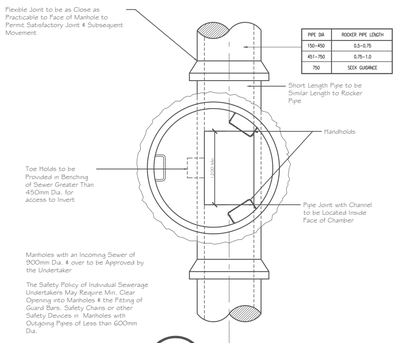

PIPE DIA	ROCKER PIPE LENGTH
150-450	0.5-0.75
451-750	0.75-1.0
750	SEEK GUIDANCE

01 / 140 Typical Manhole Detail
SCALE NTS

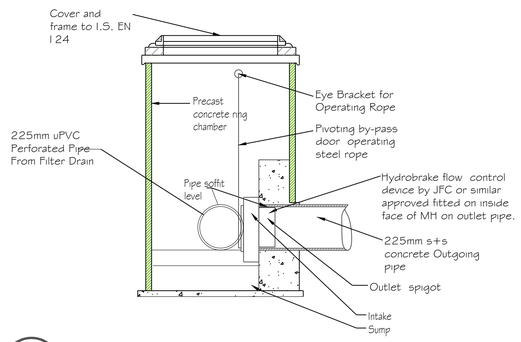

03 / 140 Section Through Storm Flow Control (Hydro-Brake) Manhole
SCALE 1:50

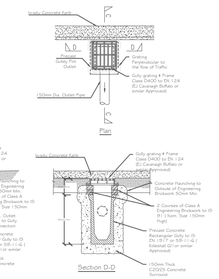

06 / 140 RECTANGULAR PRECAST ROAD GULLY DETAIL
SCALE NTS

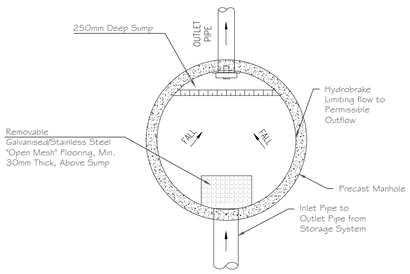

04 / 140 Typical Plan of Hydro-Brake Manhole
SCALE 1:50

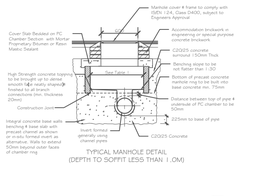

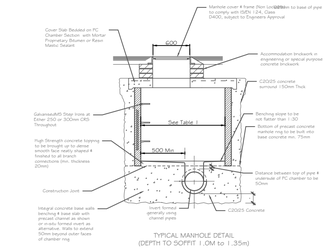

07 / 140 TYPICAL MANHOLE DETAILS
SCALE NTS

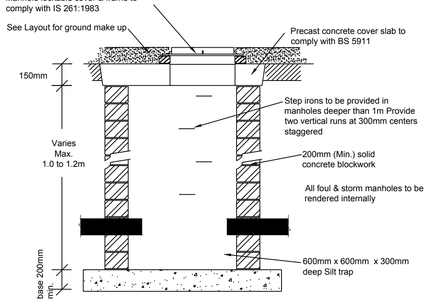

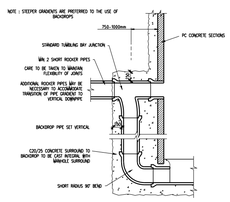

02 / 140 TYPICAL VERTICAL BACKDROP MANHOLE
SCALE: NTS

REV. NO.	DESCRIPTION	DATE	INITIALS
B	Issued for Planning	May 2019	T. Finn
A	Issued to Irish Water for Statement of Acceptance	26th April 2019	T. Finn

finn DESIGN PARTNERSHIP
CREATIVE ● INNOVATIVE

Blakestown, Ardee, Co. Louth, Ireland
t 041 6857200 f 041 6857201 e info@finn.ie w www.finn.ie

DRAWING. NO: 140
REV. NO: B

ENG

TITLE: Surface Water Drainage Details (Sheet 1 of 2)

PROJECT: Residential Development @ Haggardstown Blackrock, Dundalk Co Louth.

CLIENT: Kingsbridge Consultancy Ltd 1st Floor, Block 1, Quayside Business Park, Dundalk Co Louth

SCALE: As Shown
DRAWN: T.Finn
DATE: November 2018
CHECKED: Sheet 1 of 3
STATUS: Planning Permsission
JOB NO: 1703

NOTES
1. Copyright Reserved 2003 ©
2. Work to figured dimensions only. Do not scale drawing.
3. The contractor is responsible for checking all levels and dimensions on site and shall refer all discrepancies to the Architect
4. Where appropriate, for details of r.c. structure, or mechanical and electrical details, see Engineers drawings
5. Proprietary items shall be fixed in strict accordance with manufacturers instructions.
6. Sizes of proprietary items shall be checked with manufacturer.
7. The contractor shall be responsible for the coordination of structure, finishes and services.

● CIVIL - STRUCTURAL ENGINEERING ● PROJECT MANAGEMENT